ASSEMBLY INSTRUCTION

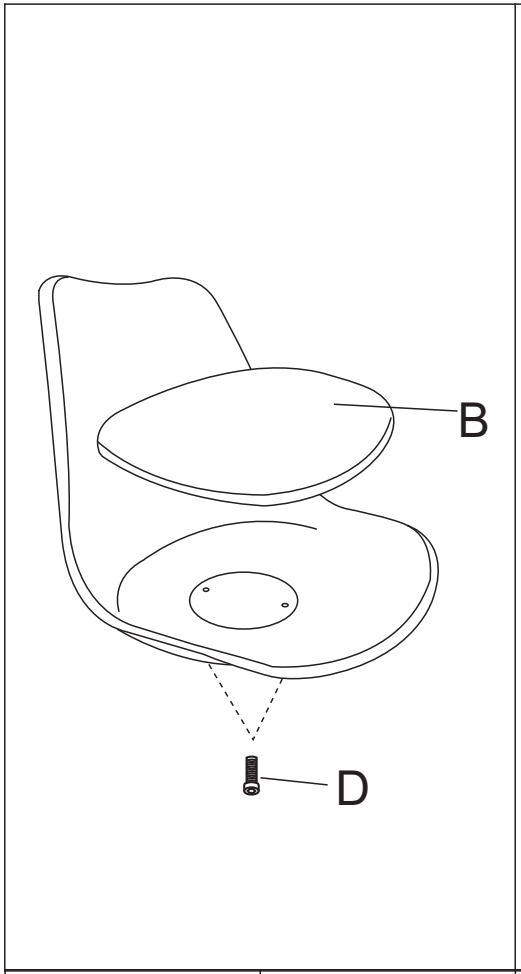

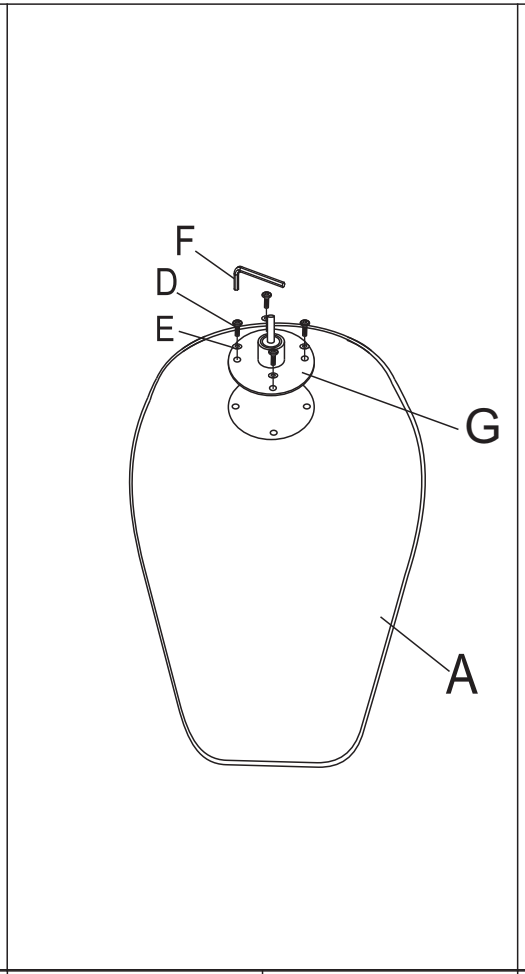

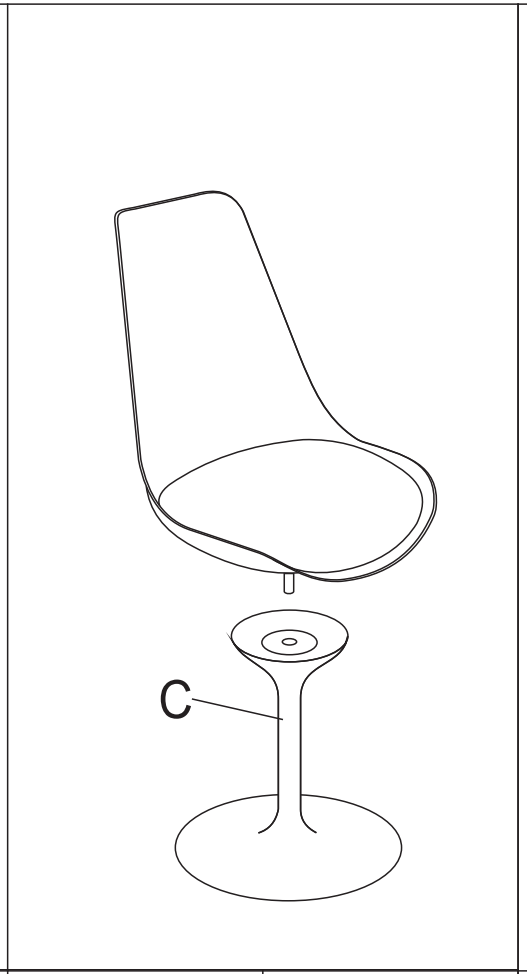

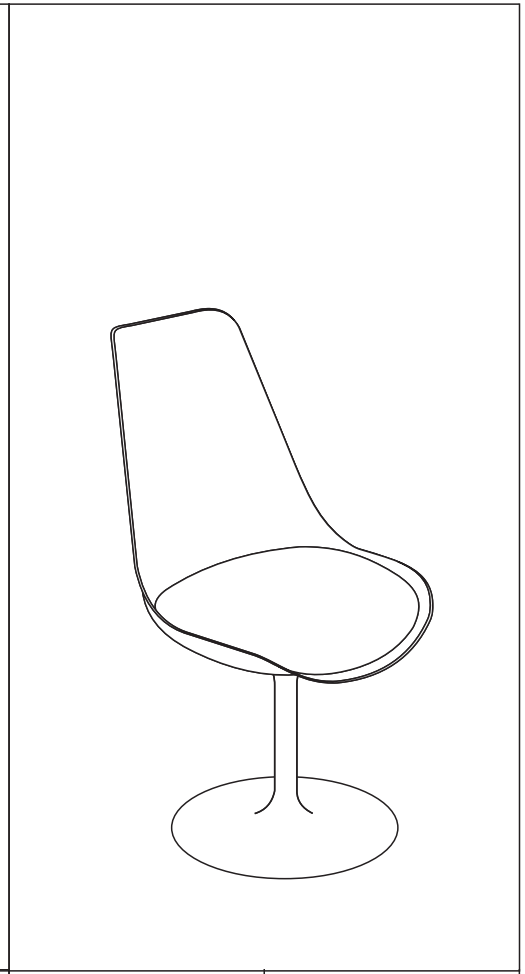

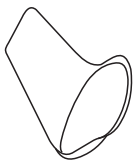

Ax1

Bx1

Cx1

M6x25mm

Dx6

Ex4

M6

Fx1

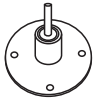

Gx1