ASSEMBLY INSTRUCTION

A		B		C		D		E		F	
M6*20mm	4PCS	M6*45mm	4PCS	M6*18mm	4PCS	M4	1PC	Ø65*4mm	1PC	M6*14mm	4PCS

①

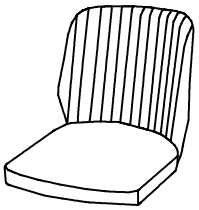

X 1

②

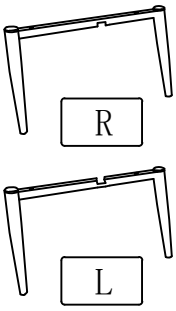

X 1

Step:1

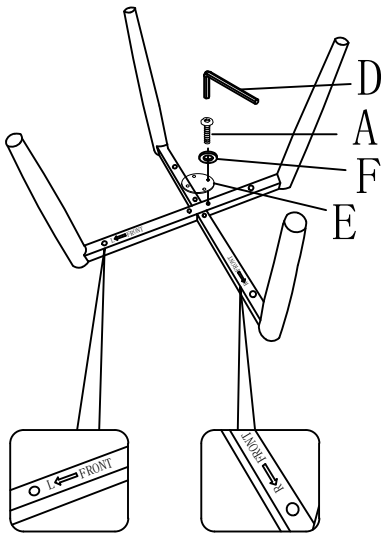

50%

Step:2

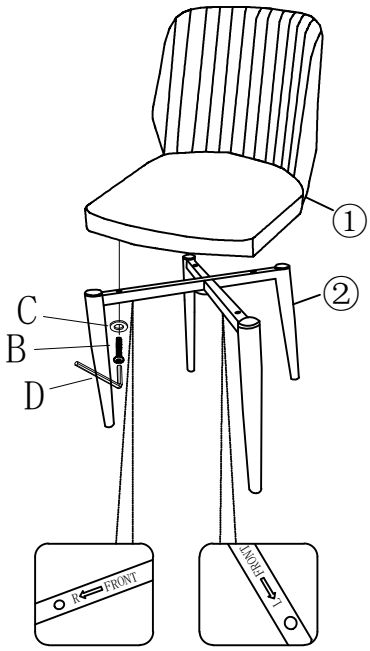

There is a mark "R", please keep it in the front

There is a mark "L", please keep it in the front

75%

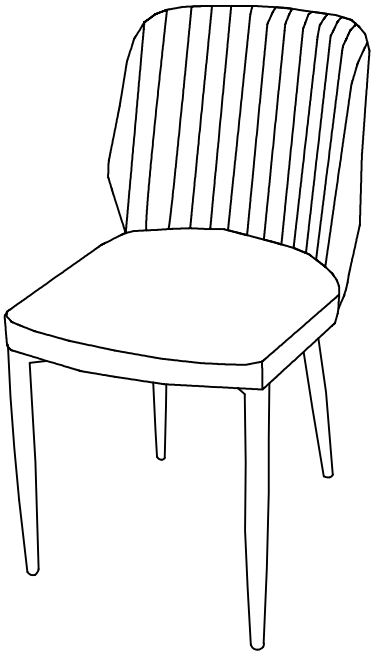

100%