ASSEMBLY INSTRUCTION

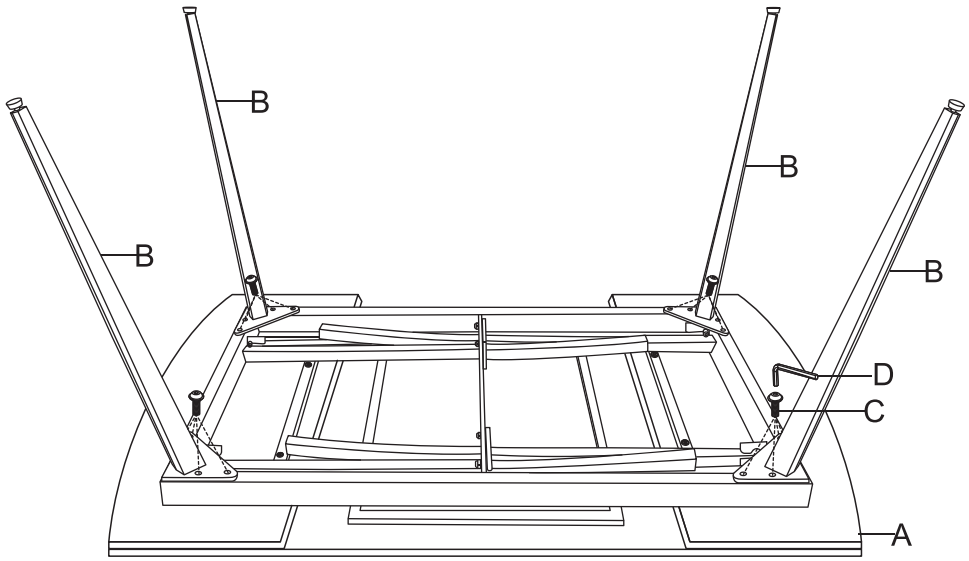

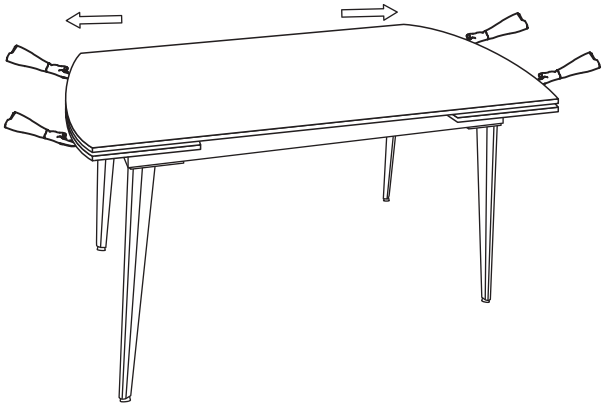

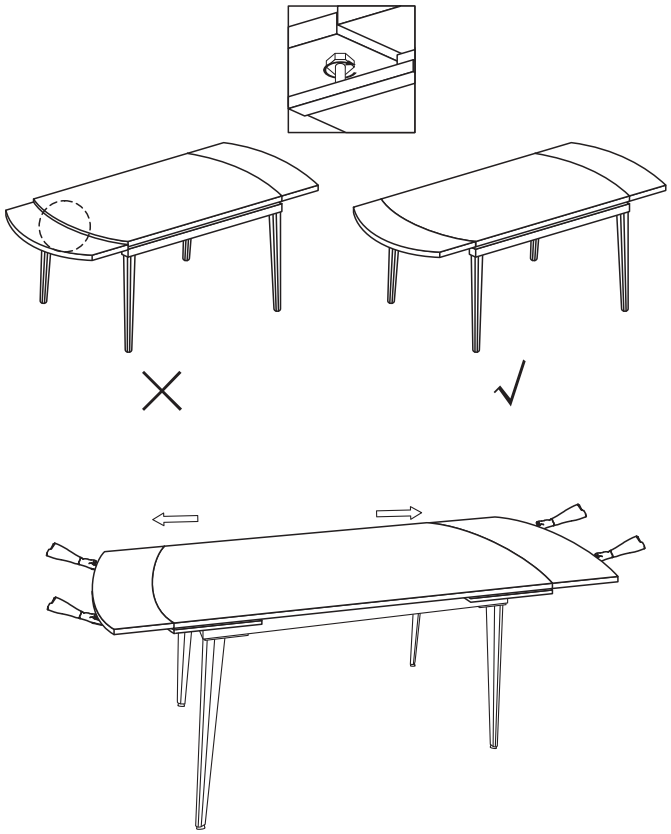

A	B	C	D
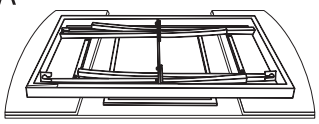 1	4	M8x16mm 16	M6 1