1

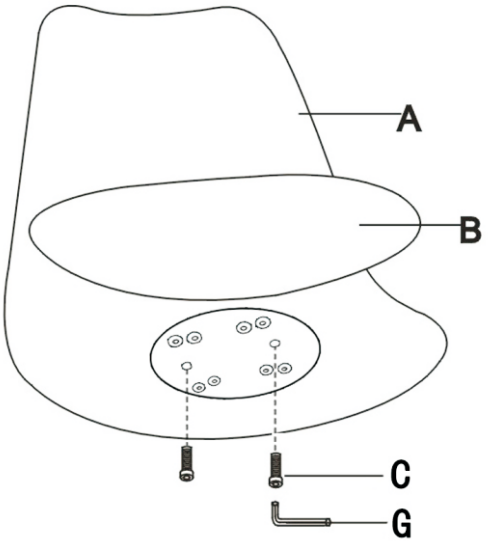

2

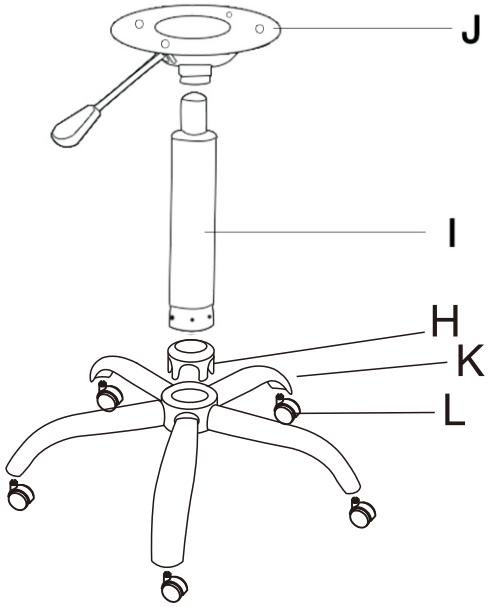

3

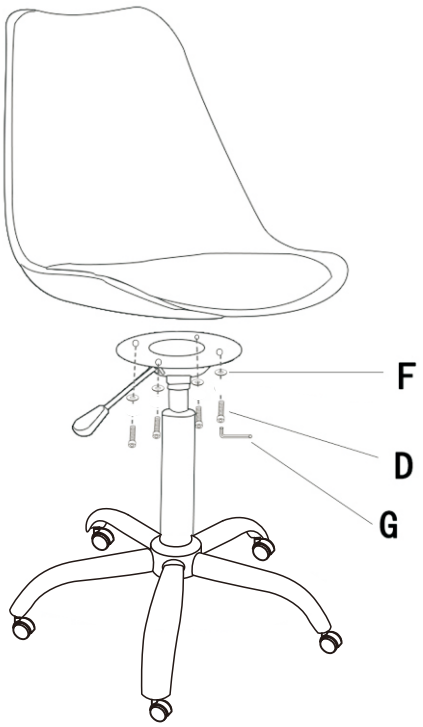

4

A	B	C	D		F	G	H	I	J	K	L
1	1	6X25MM 2	6X16MM 4		6X18MM 4	1	1	1	1	1	5